12.2 DC: Potential Dividers

Question Paper

Course	CIE A Level Physics (9702) 2019-2021
Section	12. D.C. circuits
Topic	12.2 DC: Potential Dividers
Difficulty	Hard

Time allowed: **10**

Score: **/10**

Percentage: **/100**

Question 1

The resistance *R* of an unknown resistor is compared with a fixed 100 Ω resistor using the circuit as shown in the diagram.

The balance length l is 30.0 cm and 48.3 cm when P is connected to Q and R, respectively.

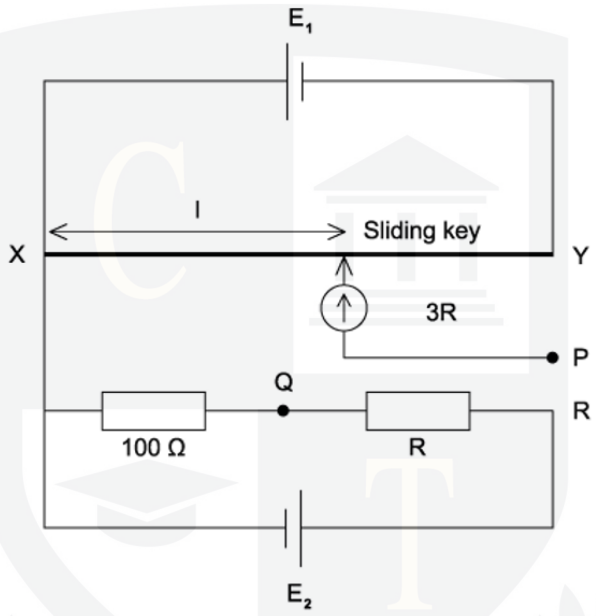

The length of the wire XY is 100 cm and has a resistance of 40 Ω. The two cells E_1 and E_2, have negligible internal resistances.

What is the value of resistance *R*?

A 38 Ω **B** 47 Ω **C** 61 Ω **D** 161 Ω

[1 mark]

Question 2

A potential divider has a constant supply of 6.0 V, as shown in the diagrams.

Which circuit will provide a potential difference between X and Y that can be varied between zero and 3.0V?

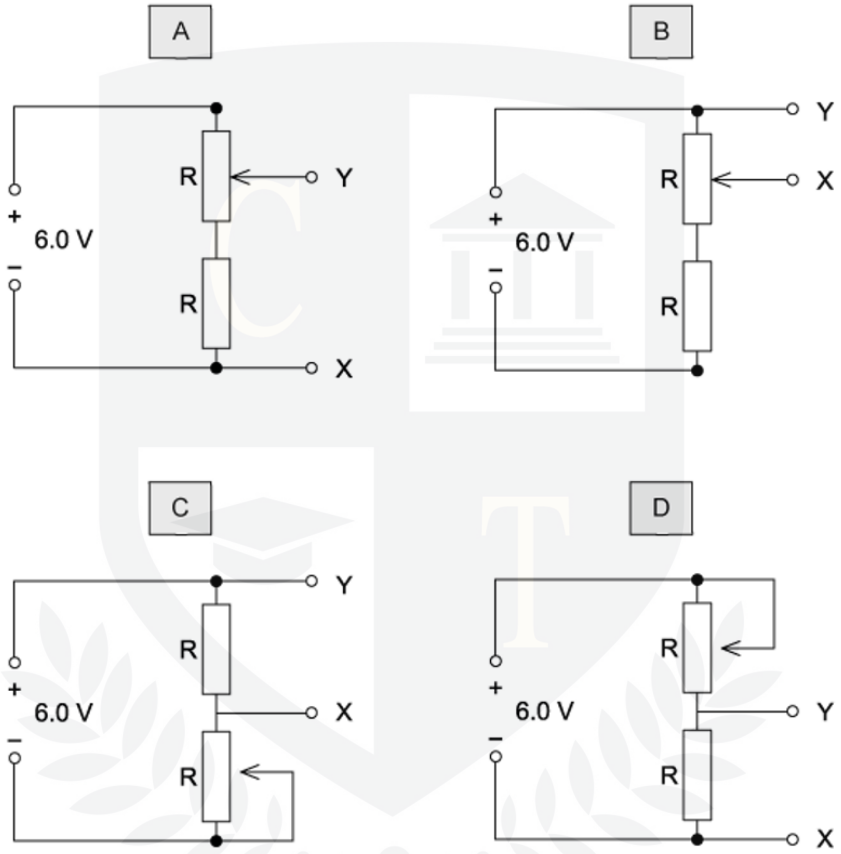

[1 mark]

Question 3

The contact is connected one at a time to points X, Y and Z to test the circuit. The lamps do not light up because lamp L is blown.

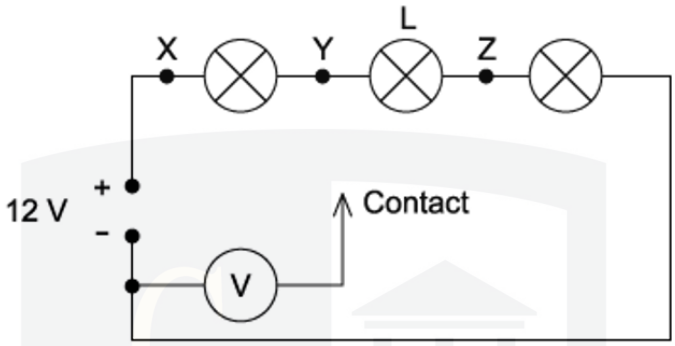

Which of the following are the readings of the voltmeter when the contact is connected to each of the points?

	X	Y	Z
A	12 V	8 V	4 V
B	8 V	8 V	0 V
C	12 V	12 V	0 V
D	8 V	12 V	4 V

[1 mark]

Question 4

The graph below shows how resistance *R* of a thermistor varies during part of a day.

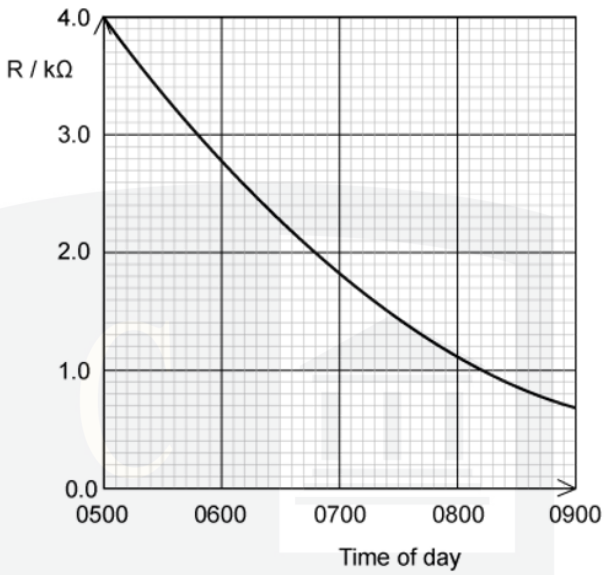

The thermistor is connected to the potential divider circuit as shown.

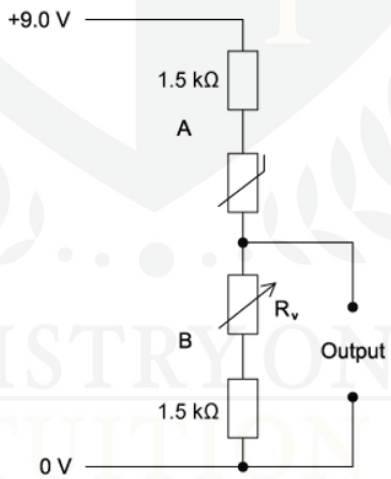

At 0730, an output of 6.0 V is required.

What value of the variable resistor should be set at this time?

A 1.5 kΩ **B** 3.0 kΩ **C** 4.5 kΩ **D** 6.0 kΩ

[1 mark]

Question 5

In the potentiometer circuit below, the moveable contact is placed at N on the bare wire XY, such that the galvanometer shows zero deflection.

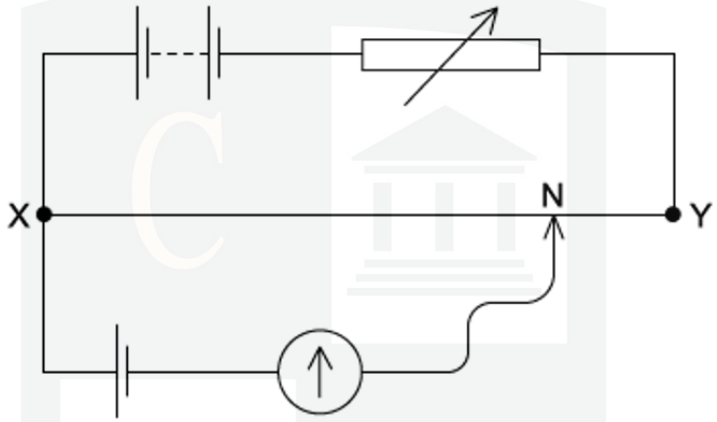

The resistance of the variable resistor is now increased.

What is the effect of this increase on the potential difference across the wire XY and on the position of the moveable contact for zero deflection?

	potential difference across XY	position of moveable contact
A	increases	nearer to X
B	increases	nearer to Y
C	decreases	nearer to X
D	decreases	nearer to Y

[1 mark]

Question 6

In the circuit shown, XY is a length *L* of uniform resistance wire. R_1 and R_2 are unknown resistors. J is a sliding contact that joins the junction of R_1 and R_2 to points on XY through a small signal lamp S.

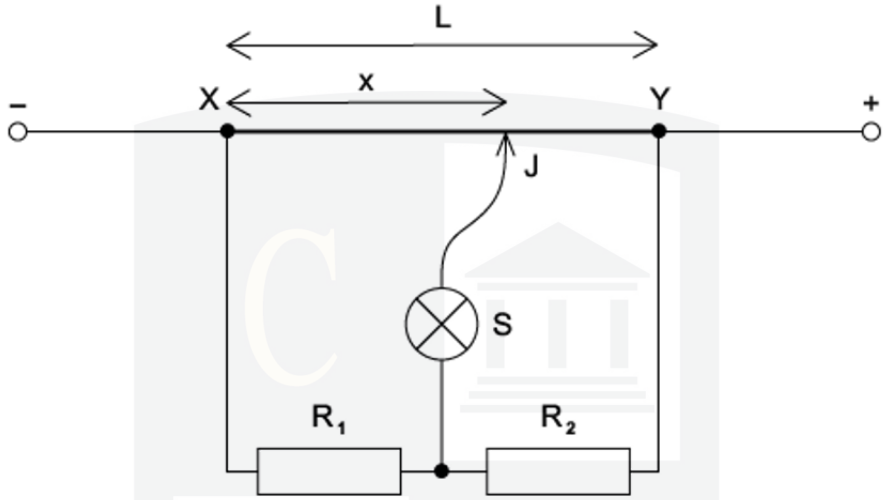

To determine the ratio $\frac{V_1}{V_2}$ of the potential differences across R_1 and R_2, a point is found on XY at which the lamp is off. This point is at a distance *x* from *X*.

What is the value of the ratio $\frac{V_1}{V_2}$?

A $\frac{L}{x}$ **B** $\frac{x}{L}$ **C** $\frac{L-x}{x}$ **D** $\frac{x}{L-x}$

[1 mark]

Question 7

The diagrams show the same cell, ammeter, potentiometer and fixed resistor connected in different ways.

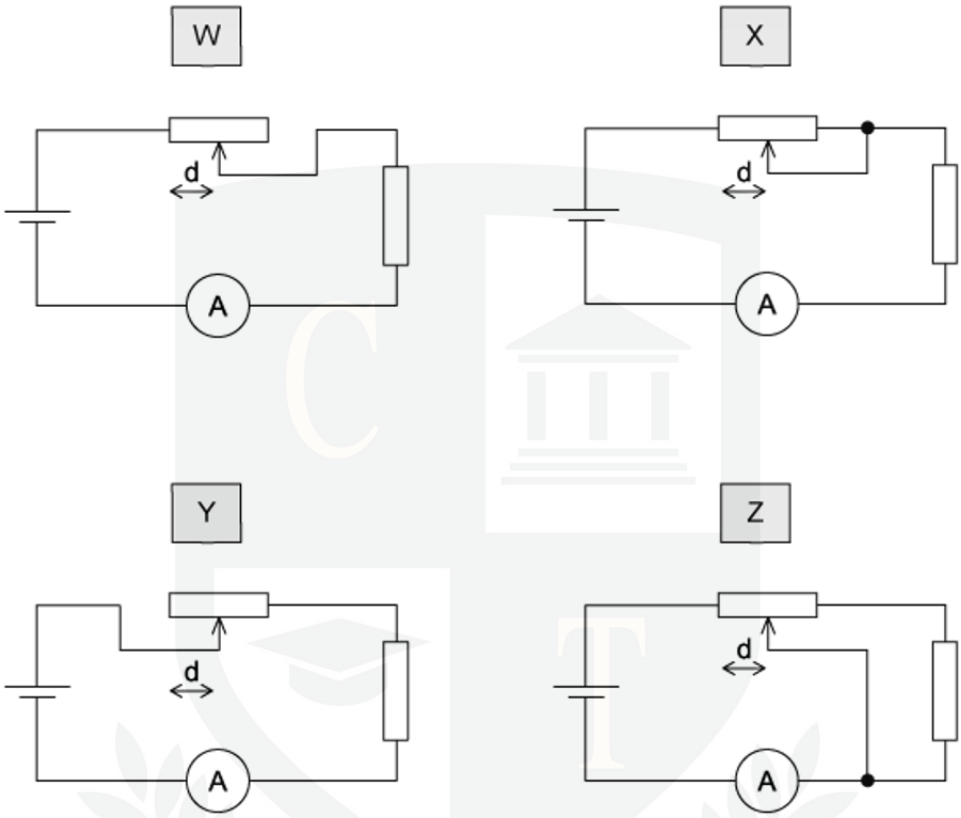

The distance *d* between the sliding contact and a particular end of the potentiometer is varied. The current measured is then plotted against the distance *d*.

For which two circuits will the graphs be identical?

A W and X **B** W and Y **C** X and Y **D** Y and Z

[1 mark]

Question 8

A power supply and a solar cell are compared using the potentiometer circuit shown.

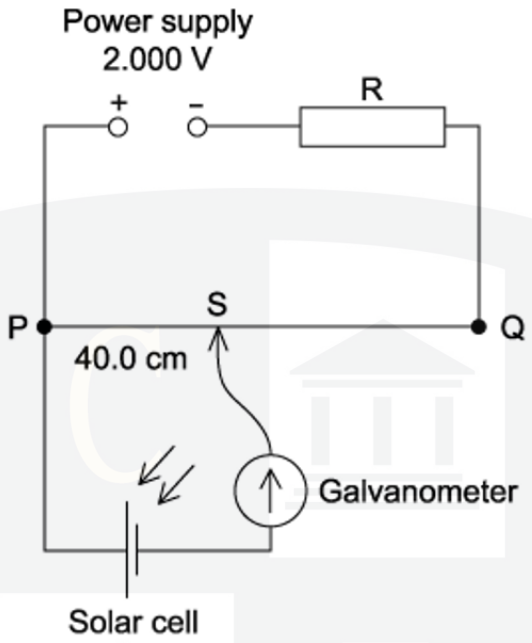

The e.m.f. produced by the solar cell is measured on the potentiometer.

The potentiometer wire PQ is 100.0 cm long and has a resistance of 5.00 Ω. The power supply has an e.m.f. of 2.000 V, and the solar cell has an e.m.f. of 5.00 mV.

Which resistance *R* must be used so that the galvanometer reads zero when PS = 40.0 cm?

A 395 Ω **B** 795 Ω **C** 995 Ω **D** 1055 Ω

[1 mark]

Question 9

In the circuit below, a voltmeter of resistance R_V and an ammeter of resistance R_A are used to measure the resistance R of the fixed resistor.

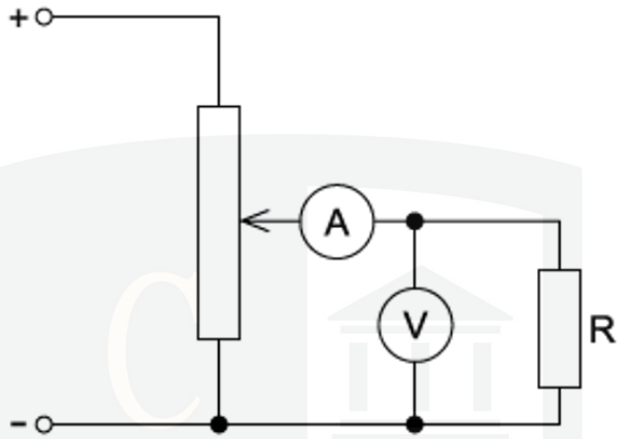

Which condition is necessary for an accurate value to be obtained for R?

A R is much smaller than R_V

B R is much smaller than R_A

C R is much greater than R_V

D R is much greater than R_A

[1 mark]

Question 10

In the potentiometer circuit shown, the reading on the ammeter is zero.

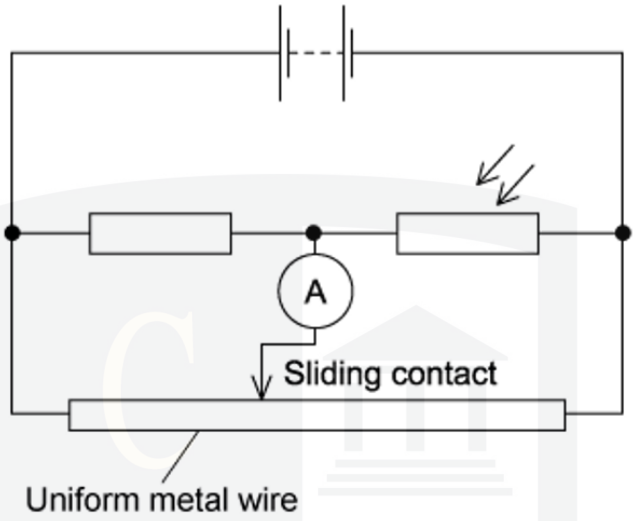

The light-dependent resistor (LDR) is then covered up, and the ammeter gives a non-zero reading.

Which change could return the ammeter reading to zero?

A decrease the supply voltage

B increase the supply voltage

C move the sliding contact to the left

D move the sliding contact to the right

[1 mark]