Kinetic Model of Matter

Question Paper

Level	O Level
Subject	Physics
Exam Board	Cambridge International Examinations
Unit	Energy & Thermal Physics
Topic	Kinetic Model of Matter
Booklet	Question Paper

Time Allowed: **55 minutes**

Score: **/46**

Percentage: **/100**

Grade Boundaries:

1 A gas in a container of fixed volume is heated.

What happens to the molecules of the gas?

A They collide less frequently.

B They expand.

C They move faster.

D They move further apart.

2 The diagram shows the inside of a refrigerator.

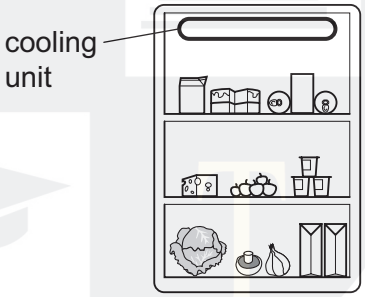

When the refrigerator is first switched on, what happens to the air near the cooling unit?

	the particles of this air	the density of this air
A	become smaller	decreases
B	become smaller	increases
C	move closer together	decreases
D	move closer together	increases

3 Which diagram represents the change in the arrangement of the molecules in a solid as the substance melts?

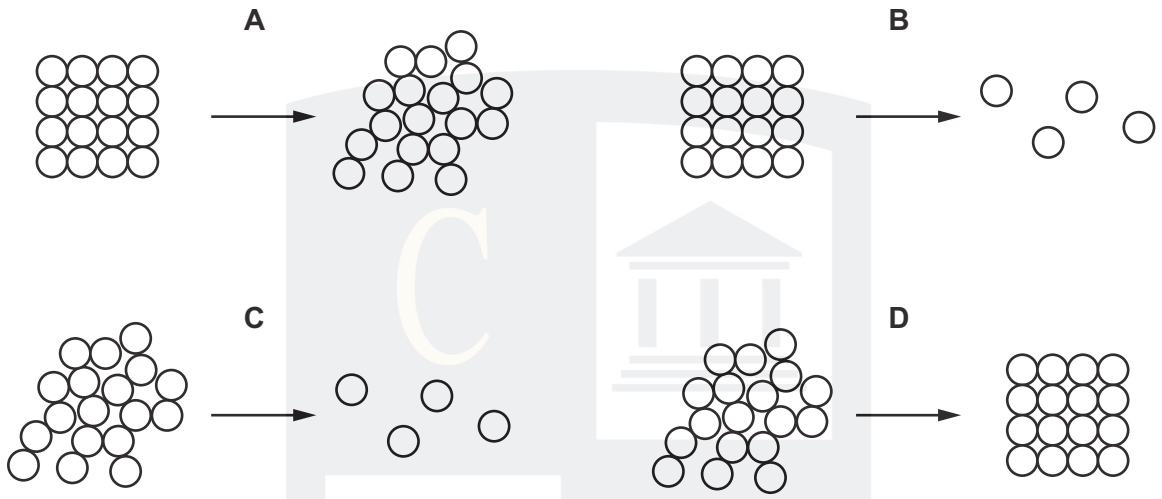

4 Some gas is trapped in a closed container. The gas is cooled and the volume of the container is kept constant.

What happens to the gas molecules?

A They collide with the walls more often.

B They contract.

C They get closer together.

D They move more slowly.

5 In a liquid, some energetic molecules break free from the surface even when the liquid is too cold for bubbles to form.

What is the name of this process?

A boiling

B condensation

C convection

D evaporation

6 A gas is in a sealed container of constant volume. The gas is heated and the pressure of the gas on the walls of the container increases.

How do the particles of the gas cause this increase in pressure?

A They expand.

B They hit each other more frequently.

C They hit the container more frequently.

D They vibrate faster.

7 Some of the liquid in a dish evaporates, as shown in the diagrams.

before evaporation after evaporation

Which molecules leave the liquid and which molecules in the liquid have greater average kinetic energy?

	molecules that leave have	molecules in the liquid have greater average kinetic energy
A	high energy	before evaporation
B	high energy	after evaporation
C	low energy	before evaporation
D	low energy	after evaporation

8 A piston is supported by gas trapped in a cylinder.

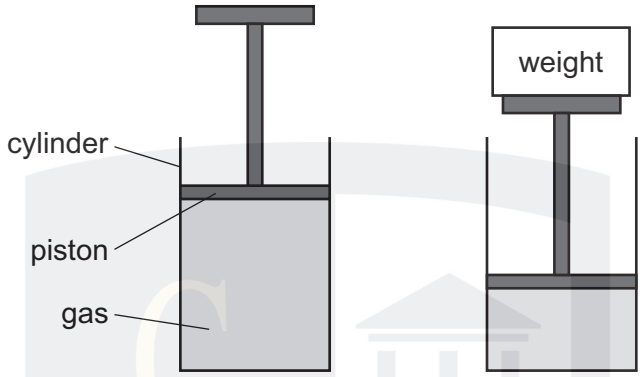

A weight is put on the piston. The volume of gas supporting the piston decreases but the temperature of the gas is unchanged.

What happens to the molecules?

A They hit the piston more frequently.

B They move more slowly.

C They have a smaller size.

D They have more kinetic energy.

9 The diagram shows a flask containing air. The air is trapped by a drop of oil in a narrow tube.

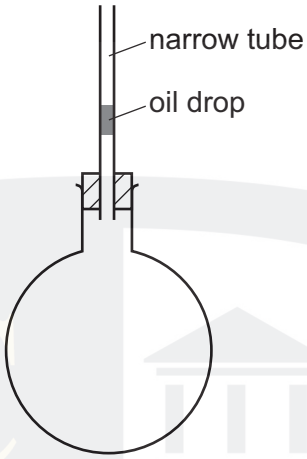

When the flask is heated the oil drop rises up the tube.

Which statement is **not** correct?

A The air molecules each get larger.

B The air molecules hit the container with greater force.

C The air molecules move faster.

D The air molecules move further apart.

10 Water is poured into four dishes. In two of the dishes the water has a small surface area and in the other two it has a large surface area. The water in two of the dishes is cool and the water in the other two is warm.

From which dish does the water evaporate the quickest?

	surface area	temperature
A	large	cool
B	large	warm
C	small	cool
D	small	warm

11 At a constant temperature, a solid has a fixed shape and a fixed volume.

Which row describes the shape and the volume of a liquid at constant temperature?

	shape	volume
A	fixed	fixed
B	fixed	not fixed
C	not fixed	fixed
D	not fixed	not fixed

12 When a gas in a container of fixed volume is heated, the pressure of the gas increases.

Which statement explains this?

A The molecules expand and get heavier, so they hit each other harder.

B The molecules have less room to move, so they collide with each other more frequently.

C The molecules hit the walls harder and less frequently.

D The molecules move faster, so they collide with the walls more frequently.

13 What happens to the molecules of a gas when the gas changes into a liquid?

A They move closer and lose energy.

B They move closer and gain energy.

C They move apart and lose energy.

D They move apart and gain energy.

14 When a person climbs out of a warm swimming pool on a hot summer day, he feels cold.

Why does this happen?

A The air has a high specific heat capacity.

B The air is a better conductor of heat than water.

C The water droplets increase his surface area.

D The water takes heat from his body to evaporate.

15 Which row correctly describes the shape and volume of a gas?

	shape	volume
A	fixed	fixed
B	fixed	not fixed
C	not fixed	fixed
D	not fixed	not fixed

16 A fixed mass of gas is kept at constant pressure. Its temperature is raised.

What happens to the volume of the gas and to its molecules?

	volume	moeculesl
A	decreases	move more slowly
B	increases	stay the same distance apart
C	increases	move further apart
D	no change	move at the same speed

17 Air is heated in a sealed container with constant volume.

Why does the air pressure increase when the temperature increases?

A The air molecules expand.

B The air molecules bounce off each other more frequently.

C The air molecules bounce off the walls more frequently.

D The number of air molecules increases.

18 The more energetic molecules in a liquid may escape from its top surface.

What is this process called?

A boiling

B Brownian motion

C convection

D evaporation

19 A gas is enclosed in a container of fixed volume. It gains heat energy from an external source.

What happens to the molecules of the gas?

A They expand.

B They move faster inside the container.

C They move further apart.

D They vibrate with greater frequency.

20 A fixed mass of gas is enclosed in a cylinder by a movable piston.

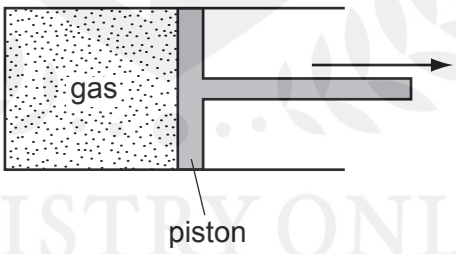

The piston is moved so that the volume occupied by the gas increases. The temperature remains constant.

What happens to the pressure of the gas and why does this happen?

	pressure	reason
A	decreases	the molecules move more slowly
B	decreases	the molecules collide with the piston less frequently
C	increases	the molecules move more quickly
D	increases	the molecules collide with the piston more frequently

21 A substance has a melting point of –17 °C and a boiling point of 117 °C.

In which state does the substance exist at –10 °C and at 110 °C?

	at –10 °C	at 110 °C
A	solid	liquid
B	solid	gas
C	liquid	liquid
D	liquid	gas

22 When a gas is rapidly compressed to a smaller volume, its temperature increases.

What happens to the gas molecules?

A They move closer together and their average speed decreases.

B They move closer together and their average speed increases.

C They move closer together and their average speed remains unchanged.

D They stay the same distance apart and their average speed increases.

23 On a hot day, the drink in a bottle can be kept cool by standing the bottle in a bowl of water and placing a wet cloth over it.

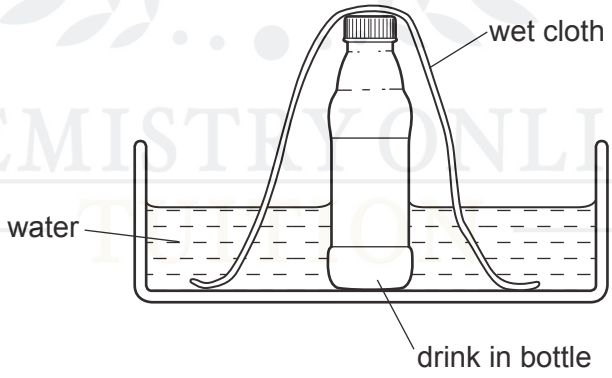

Why is the drink kept cool?

A Hot air cannot escape from the bottle.

B The cloth conducts heat from the bottle into the water.

C The drink cannot evaporate from the bottle.

D Water evaporating from the cloth cools the drink.

24 According to the kinetic theory, matter is made up of very small particles in a constant state of motion.

Which row best describes the particle behaviour in the liquid state?

	forces between particles	motion of particles
A	strong	move randomly at high speed
B	strong	vibrate but are free to move position
C	strong	vibrate to and fro around a fixed position
D	weak	move randomly at high speed

25 A balloon filled with air is gently heated.

What happens to the mass and the density of the air inside the balloon?

	mass	density
A	decreases	decreases
B	decreases	stays the same
C	stays the same	decreases
D	stays the same	stays the same

26 Which row explains why a liquid has a fixed volume but does **not** have a fixed shape?

	force between molecules in the liquid	movement of molecules in the liquid
A	large	move throughout the liquid
B	large	vibrate at fixed positions
C	small	move throughout the liquid
D	small	vibrate at fixed positions

27 The liquid in a puddle evaporates and this causes its temperature to change.

How does the temperature of the liquid change and why?

	change	Reason
A	decreases	less energetic molecules leave the liquid
B	decreases	more energetic molecules leave the liquid
C	increases	less energetic molecules leave the liquid
D	increases	more energetic molecules leave the liquid

28 A liquid evaporates rapidly.

Why does this cause it to cool?

A Air molecules remove heat by contact with the liquid surface.

B Energy is lost by convection currents.

C Some of the most energetic molecules leave the liquid.

D The molecules have less room to move around.

29 What happens when a metal bar is heated?

A The distance between the molecules increases, making the bar longer.

B The molecules get larger, making the bar longer.

C The molecules vibrate more quickly, making the bar denser.

D The speed of the molecules increases, making the bar thinner.

30 A fixed mass of gas at constant temperature is compressed to reduce its volume.

How do the molecules of gas now strike the walls of the container?

A less often than before with a higher velocity

B less often than before with the same velocity

C more often than before with a higher velocity

D more often than before with the same velocity

31 A quantity of gas is trapped in a container by a piston exerting a force *F*.

The temperature of the gas is raised while *F* remains unchanged.

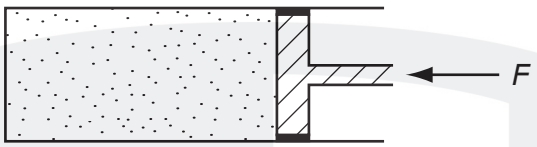

Which statement is correct?

A The gas expands.

B The molecules get larger.

C The piston remains in the same place.

D The speed of the molecules decreases.

32 The diagram shows a cross-section through a rain-water puddle formed in a shallow depression in a road surface.

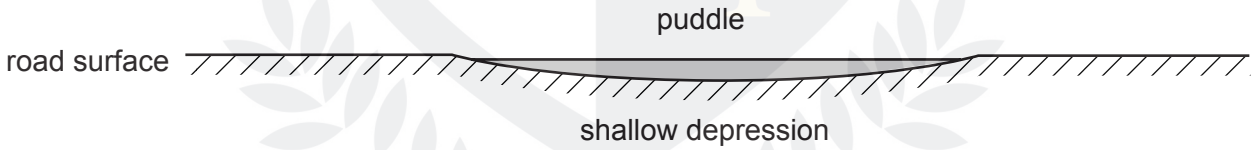

Over a period of time, the air temperature, wind speed and wind direction all remain constant.

What happens to the rate of evaporation of water from the puddle?

A It decreases, because the surface area decreases.

B It increases, because the puddle gets shallower.

C It increases, because the surface area decreases.

D It remains constant.

33 A student is investigating the evaporation of water.

The student can change:

the depth of the water;

the surface area of the water;

the temperature of the water.

How many of these changes, if any, would alter the rate at which evaporation occurs?

A 0 **B** 1 **C** 2 **D** 3

34 The table shows the increase in length of four metals when heated through the same temperature rise. Each metal initially has the same length.

metal	increase in length / m
aluminium	0.000030
copper	0.000020
platinum	0.000009
steel	0.000010

A bimetallic strip is made from two of the metals. When heated, it bends in the direction shown.

Which metals produce the above effect?

	metal X	metal Y
A	aluminium	platinum
B	copper	aluminium
C	steel	copper
D	platinum	steel

35 A liquid is heated.

Which statement is **incorrect**?

A The molecules expand.

B The molecules gain energy.

C The molecules move further apart.

D The molecules move faster.

36 What describes the molecular structure of a liquid?

	distance between the molecules	motion of the molecules	strength of forces between the molecules
A	close together	stationary	very strong
B	close together	random	fairly strong
C	far apart	stationary	fairly strong
D	far apart	random	weak

37 Which of the following correctly compares the forces between the molecules in steam, water and ice?

	weakest forces →		strongest forces
A	ice	steam	water
B	ice	water	steam
C	steam	water	ice
D	water	steam	ice

38 Some of the more energetic molecules in a liquid leave the surface, leaving the rest of the liquid slightly cooler.

What is the name given to this process?

A boiling

B condensation

C evaporation

D freezing

39 A substance consists of particles that are close together and moving past each other at random. The average speed of the particles is gradually increasing.

What best describes the substance?

A a gas being heated

B a liquid being heated

C a solid being heated

D a solid being melted

40 What is a property of both liquids and gases?

A They always fill their containers.

B They are incompressible.

C They can flow.

D They have molecules in fixed positions.

41 What conditions of temperature and surface area would produce the most rapid evaporation from a pool of water on a road surface?

	temperature	surface area
A	high	large
B	high	small
C	low	large
D	low	small

42 Which factors increase the rate of evaporation of a liquid?

	increasing its temperature	increasing its surface area	increasing its depth
A	yes	yes	yes
B	yes	yes	no
C	yes	no	yes
D	no	yes	yes

43 What will **not** affect the rate of evaporation from the surface of a liquid?

A depth of the liquid

B draughts above the surface of the liquid

C surface area of the liquid

D temperature of the liquid

44 A substance consists of particles that are close together and moving past each other at random. The average speed of the particles is gradually increasing.

What best describes the substance?

A a liquid being boiled to form a gas

B a liquid being heated

C a solid being heated

D a solid being melted to form a liquid

45 A student has three sealed plastic bags. One bag is full of gas, one of liquid and one of solid.

The student squeezes each bag to see if it changes shape, and warms each bag to see if it expands.

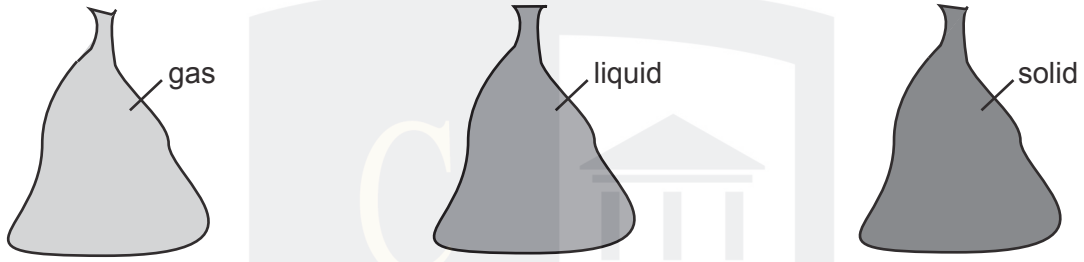

Which bag contains gas?

A the one that changes shape easily and expands the least when heated

B the one that changes shape easily and expands the most when heated

C the one that is fixed in shape and expands the least when heated

D the one that is fixed in shape and expands the most when heated

46 A swimmer climbs out of a swimming pool on a warm, dry day. Almost immediately he begins to feel cold.

Why is this?

A The water allows a convection current to remove heat from his skin.

B The water takes latent heat from his body in order to evaporate.

C The water on his skin is a good conductor of heat.

D The water prevents infra-red radiation from reaching his body.