Oscillations

Question paper 5

Level	International A Level
Subject	Physics
Exam Board	CIE
Topic	Oscillations
Sub Topic	
Paper Type	Theory
Booklet	Question paper 5

Time Allowed: **80 minutes**

Score: **/66**

Percentage: **/100**

A*	A	B	C	D	E	U
>85%	'77.5%	70%	62.5%	57.5%	45%	<45%

1 A vertical peg is attached to the edge of a horizontal disc of radius ***r***, as shown in Fig. 4.1.

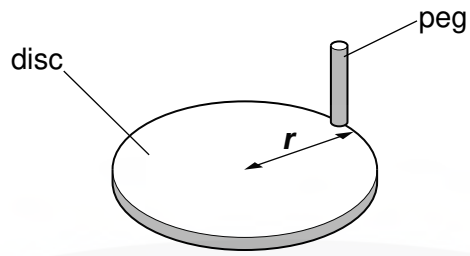

Fig. 4.1

The disc rotates at constant angular speed ω. A horizontal beam of parallel light produces a shadow of the peg on a screen, as shown in Fig. 4.2.

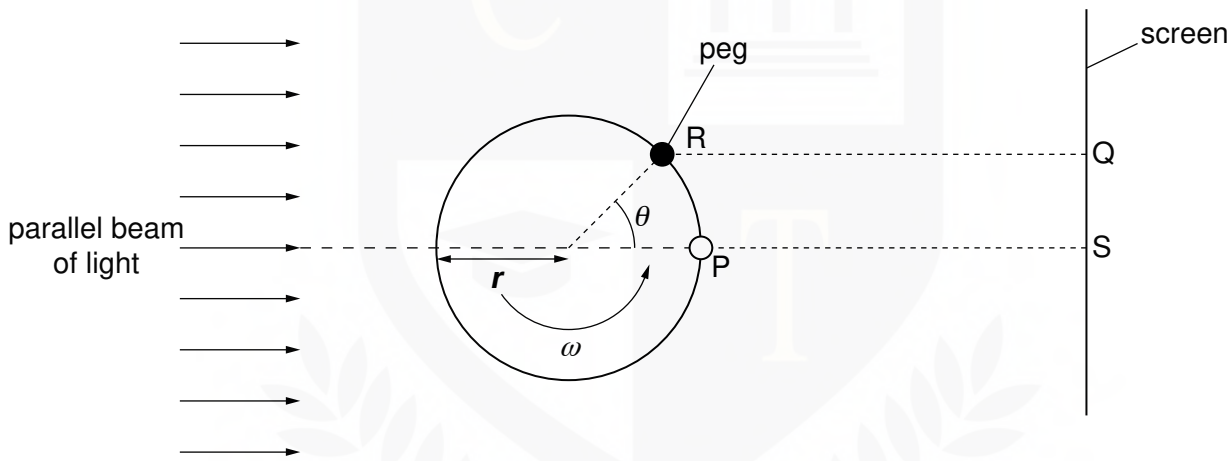

Fig. 4.2 (plan view)

At time zero, the peg is at P, producing a shadow on the screen at S.
At time ***t***, the disc has rotated through angle θ. The peg is now at R, producing a shadow at Q.

(a) Determine,

(i) in terms of ω and ***t***, the angle θ,

..... [1]

(ii) in terms of ω, ***t*** and ***r***, the distance SQ.

..... [1]

(b) Use your answer to **(a)(ii)** to show that the shadow on the screen performs simple harmonic motion.

.....

.....

..... [2]

(c) The disc has radius ***r*** of 12 cm and is rotating with angular speed ω of 4.7 rad s^{-1}.

Determine, for the shadow on the screen,

(i) the frequency of oscillation,

frequency = ... Hz [2]

(ii) its maximum speed.

speed = ... cm s^{-1} [2]

2 The needle of a sewing machine is made to oscillate vertically through a total distance of 22 mm, as shown in Fig. 3.1.

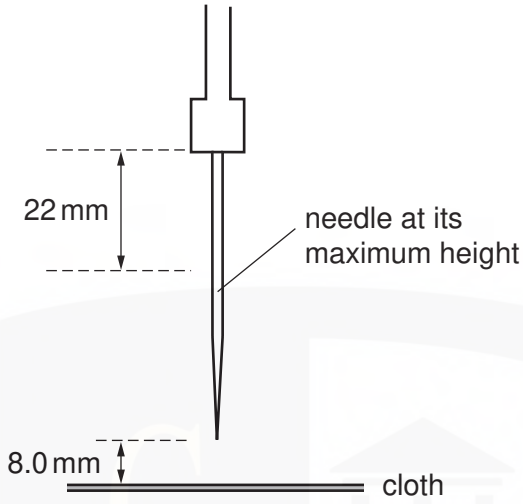

Fig. 3.1

The oscillations are simple harmonic with a frequency of 4.5 Hz.
The cloth that is being sewn is positioned 8.0 mm below the point of the needle when the needle is at its maximum height.

(a) State what is meant by ***simple harmonic motion***.

.....

.....

.....[2]

(b) The displacement ***y*** of the point of the needle may be represented by the equation

$$y = a \cos \omega t.$$

(i) Suggest the position of the point of the needle at time $t = 0$.

.....[1]

(ii) Determine the values of

1. ***a***,

a = ... mm [1]

2. ω.

ω = ... rad s^{-1} [2]

(c) Calculate, for the point of the needle,

(i) its maximum speed,

speed = ... $m\,s^{-1}$ [2]

(ii) its speed as it moves downwards through the cloth.

speed = ... $m\,s^{-1}$ [3]

3 A tube, closed at one end, has a uniform area of cross-section. The tube contains some sand so that the tube floats upright in a liquid, as shown in Fig. 3.1.

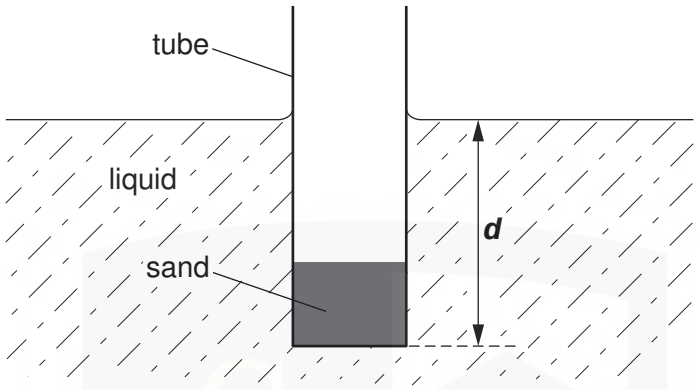

Fig. 3.1

When the tube is at rest, the depth ***d*** of immersion of the base of the tube is 16 cm.
The tube is displaced vertically and then released.
The variation with time ***t*** of the depth ***d*** of the base of the tube is shown in Fig. 3.2.

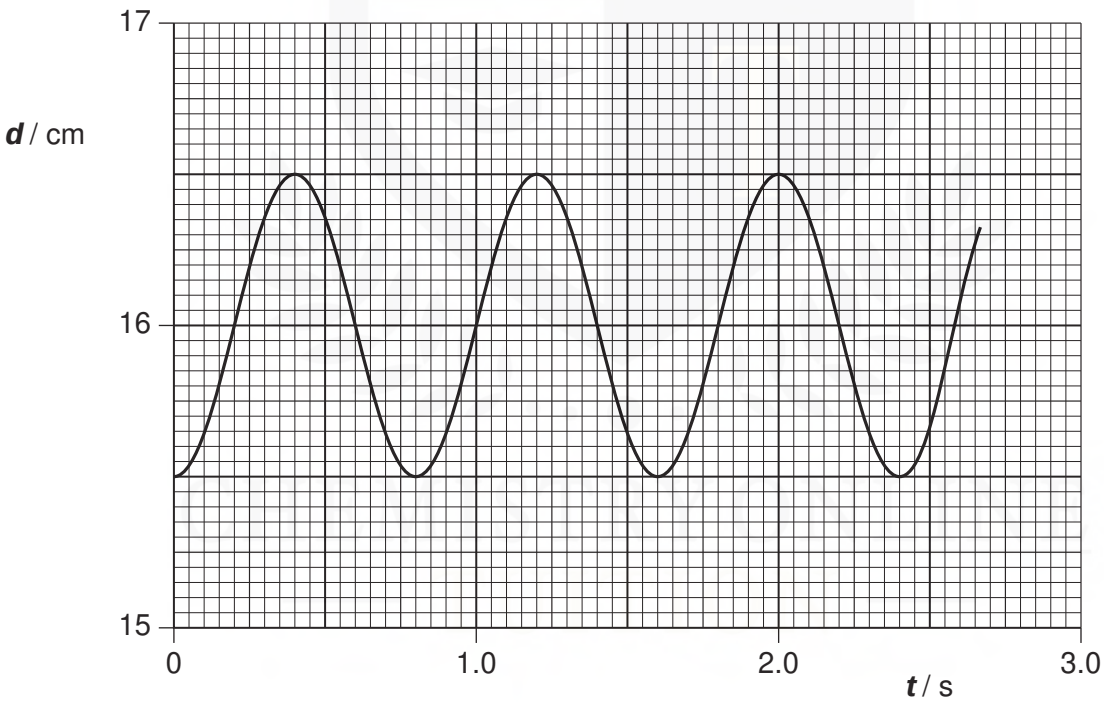

Fig. 3.2

(a) Use Fig. 3.2 to determine, for the oscillations of the tube,

(i) the amplitude,

amplitude = ... cm [1]

(ii) the period.

period = ... s [1]

(b) **(i)** Calculate the vertical speed of the tube at a point where the depth ***d*** is 16.2 cm.

speed = ... cm s^{-1} [3]

(ii) State **one** other depth ***d*** where the speed will be equal to that calculated in **(i)**.

d = ... cm [1]

(c) **(i)** Explain what is meant by ***damping***.

.....

.....

.....

.....[2]

(ii) The liquid in **(b)** is now cooled so that, although the density is unchanged, there is friction between the liquid and the tube as it oscillates. Having been displaced, the tube completes approximately 10 oscillations before coming to rest.
On Fig. 3.2, draw a line to show the variation with time ***t*** of depth ***d*** for the first 2.5 s of the motion. [3]

4 A spring is hung from a fixed point. A mass of 130 g is hung from the free end of the spring, as shown in Fig. 3.1.

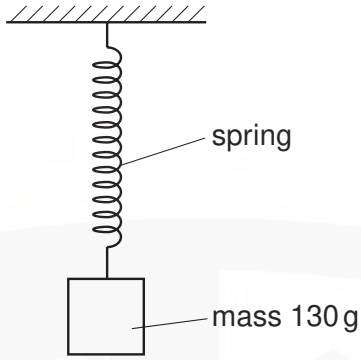

Fig. 3.1

The mass is pulled downwards from its equilibrium position through a small distance ***d*** and is released. The mass undergoes simple harmonic motion.
Fig. 3.2 shows the variation with displacement ***x*** from the equilibrium position of the kinetic energy of the mass.

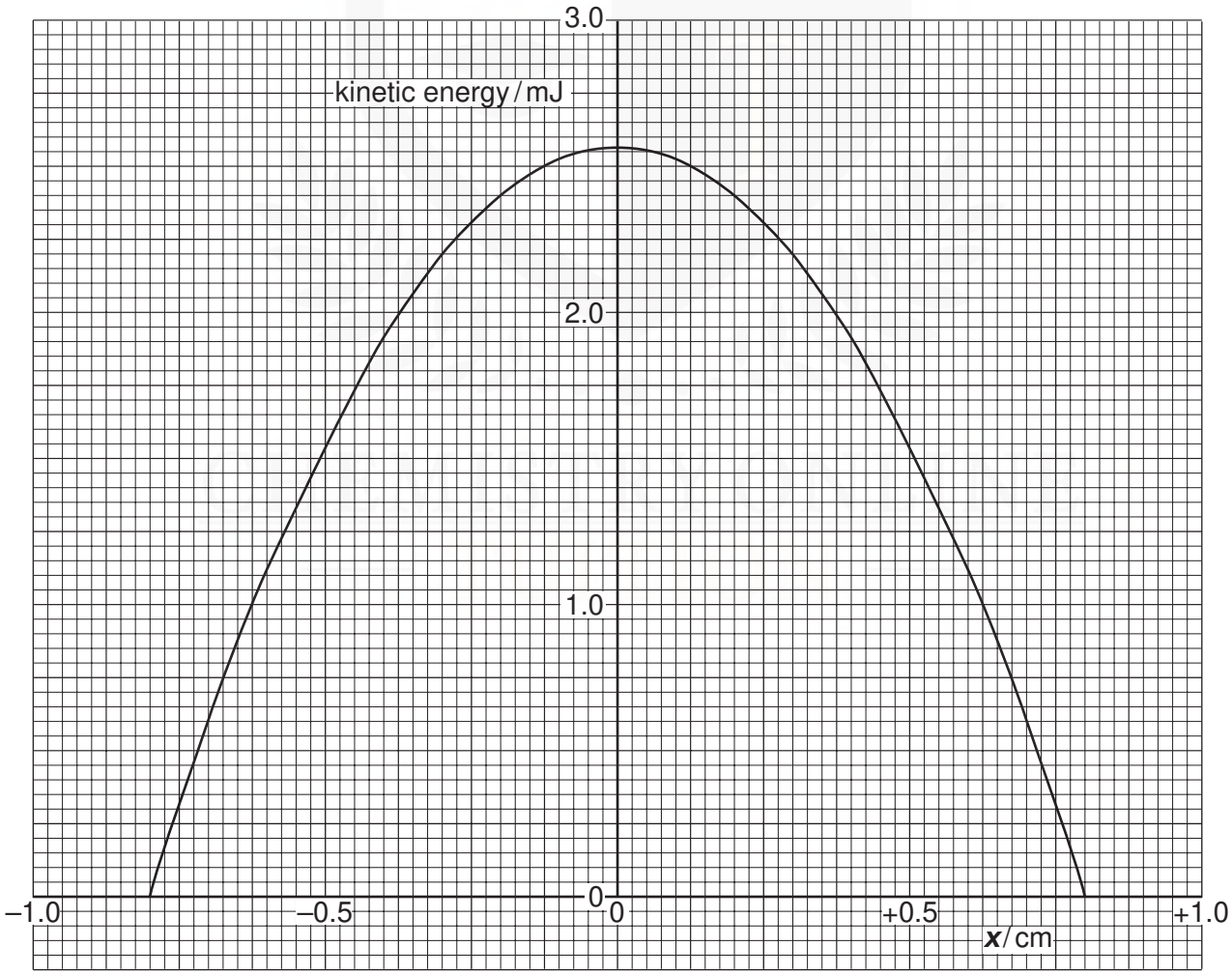

Fig. 3.2

(a) Use Fig. 3.2 to

(i) determine the distance ***d*** through which the mass was displaced initially,

d = ... cm [1]

(ii) show that the frequency of oscillation of the mass is approximately 4.0 Hz.

[6]

(b) **(i)** On Fig. 3.2, draw a line to represent the total energy of the oscillating mass. [1]

(ii) After many oscillations, damping reduces the total energy of the mass to 1.0 mJ.
For the oscillations with reduced energy,

1. state the frequency,

frequency = ...Hz

2. using the graph, or otherwise, state the amplitude.

amplitude = ... cm [2]

5 Two vertical springs, each having spring constant ***k***, support a mass. The lower spring is attached to an oscillator as shown in Fig. 3.1.

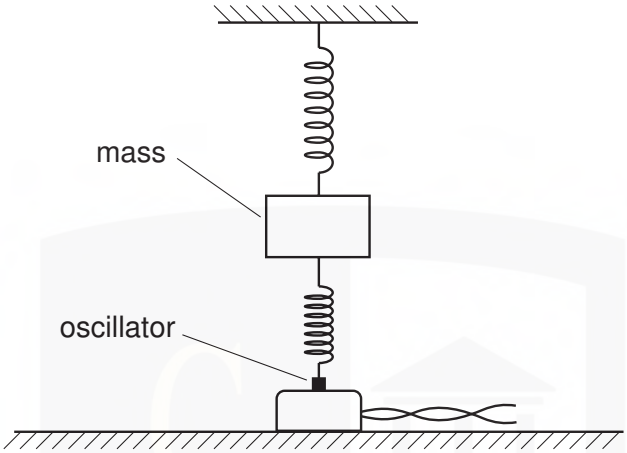

Fig. 3.1

The oscillator is switched off. The mass is displaced vertically and then released so that it vibrates. During these vibrations, the springs are always extended. The vertical acceleration ***a*** of the mass ***m*** is given by the expression

$$ma = -2kx,$$

where ***x*** is the vertical displacement of the mass from its equilibrium position.

(a) Show that, for a mass of 240 g and springs with spring constant $3.0\,\mathrm{N\,cm^{-1}}$, the frequency of vibration of the mass is approximately 8 Hz.

[4]

(b) The oscillator is switched on and the frequency ***f*** of vibration is gradually increased. The amplitude of vibration of the oscillator is constant.

Fig. 3.2 shows the variation with ***f*** of the amplitude ***A*** of vibration of the mass.

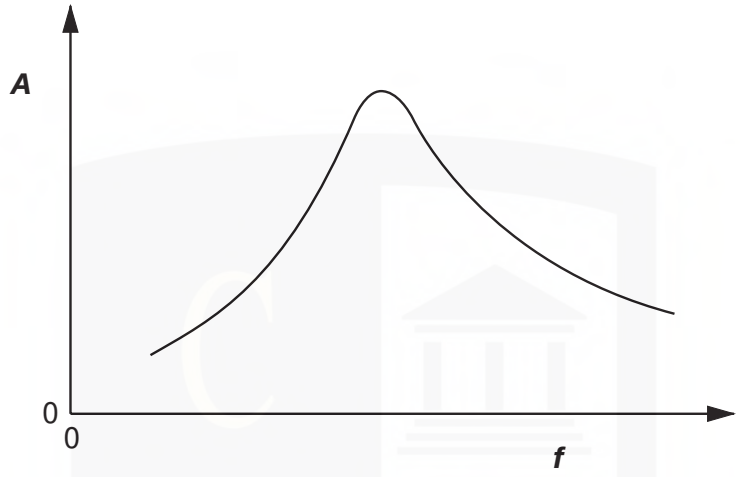

Fig. 3.2

State

(i) the name of the phenomenon illustrated in Fig. 3.2,

..... [1]

(ii) the frequency f_0 at which maximum amplitude occurs.

frequency = ... Hz [1]

(c) Suggest and explain how the apparatus in Fig. 3.1 could be modified to make the peak on Fig. 3.2 flatter, without significantly changing the frequency f_0 at which the peak occurs.

.....

.....

.....

..... [3]

6 A piston moves vertically up and down in a cylinder, as illustrated in Fig. 4.1.

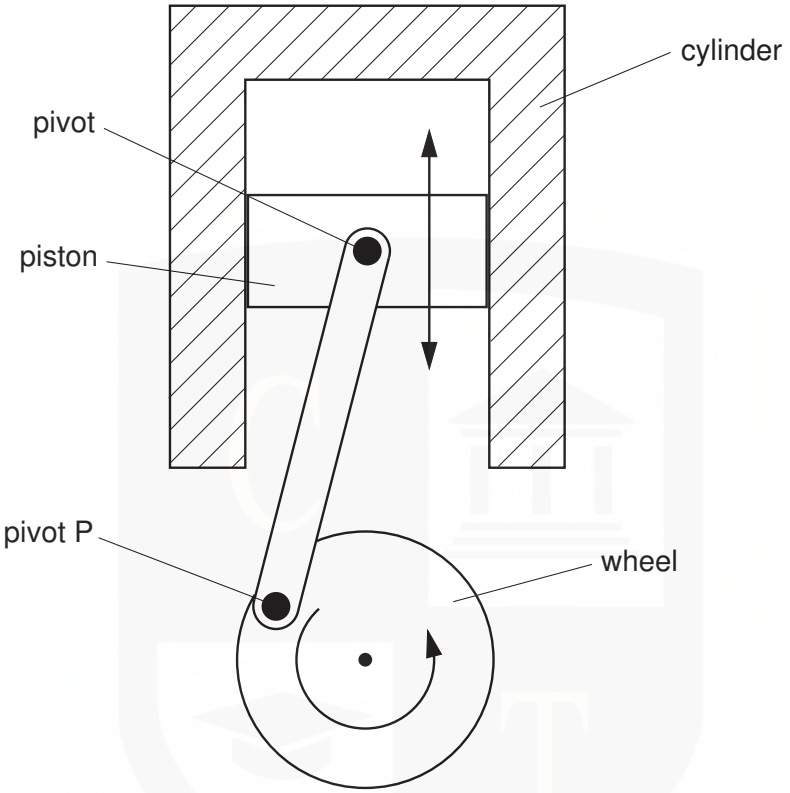

Fig. 4.1

The piston is connected to a wheel by means of a rod that is pivoted at the piston and at the wheel. As the piston moves up and down, the wheel is made to rotate.

(a) **(i)** State the number of oscillations made by the piston during one complete rotation of the wheel.

number = ... [1]

(ii) The wheel makes 2400 revolutions per minute. Determine the frequency of oscillation of the piston.

frequency = ... Hz [1]

(b) The amplitude of the oscillations of the piston is 42 mm.

Assuming that these oscillations are simple harmonic, calculate the maximum values for the piston of

(i) the linear speed,

speed = ... $m\,s^{-1}$ [2]

(ii) the acceleration.

acceleration = ... $m\,s^{-2}$ [2]

(c) On Fig. 4.1, mark a position of the pivot P for the piston to have

(i) maximum speed (mark this position S), [1]

(ii) maximum acceleration (mark this position A). [1]

7 The centre of the cone of a loudspeaker is oscillating with simple harmonic motion of frequency 1400 Hz and amplitude 0.080 mm.

(a) Calculate, to two significant figures,

(i) the angular frequency ω of the oscillations,

ω = ... rad s^{-1} [2]

(ii) the maximum acceleration, in m s^{-2}, of the centre of the cone.

acceleration = ... m s^{-2} [2]

(b) On the axes of Fig. 4.1, sketch a graph to show the variation with displacement ***x*** of the acceleration ***a*** of the centre of the cone.

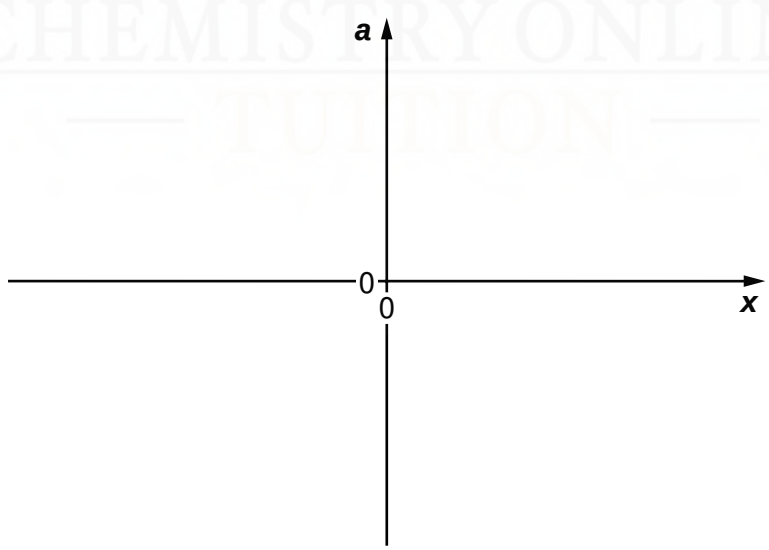

[2]

Fig. 4.1

(c) **(i)** State the value of the displacement ***x*** at which the speed of the centre of the cone is a maximum.

x = …… mm [1]

(ii) Calculate, in m s^{-1}, this maximum speed.

speed = …… m s^{-1} [2]