Wave Basics

Question paper 3

Level	International A Level
Subject	Physics
Exam Board	CIE
Topic	Waves
Sub Topic	Wave Basics
Paper Type	Theory
Booklet	Question paper 3

Time Allowed: **76 minutes**

Score: **/63**

Percentage: **/100**

A*	A	B	C	D	E	U
>85%	'77.5%	70%	62.5%	57.5%	45%	<45%

1 Fig. 5.1 shows the variation with time t of the displacements x_A and x_B at a point P of two sound waves A and B.

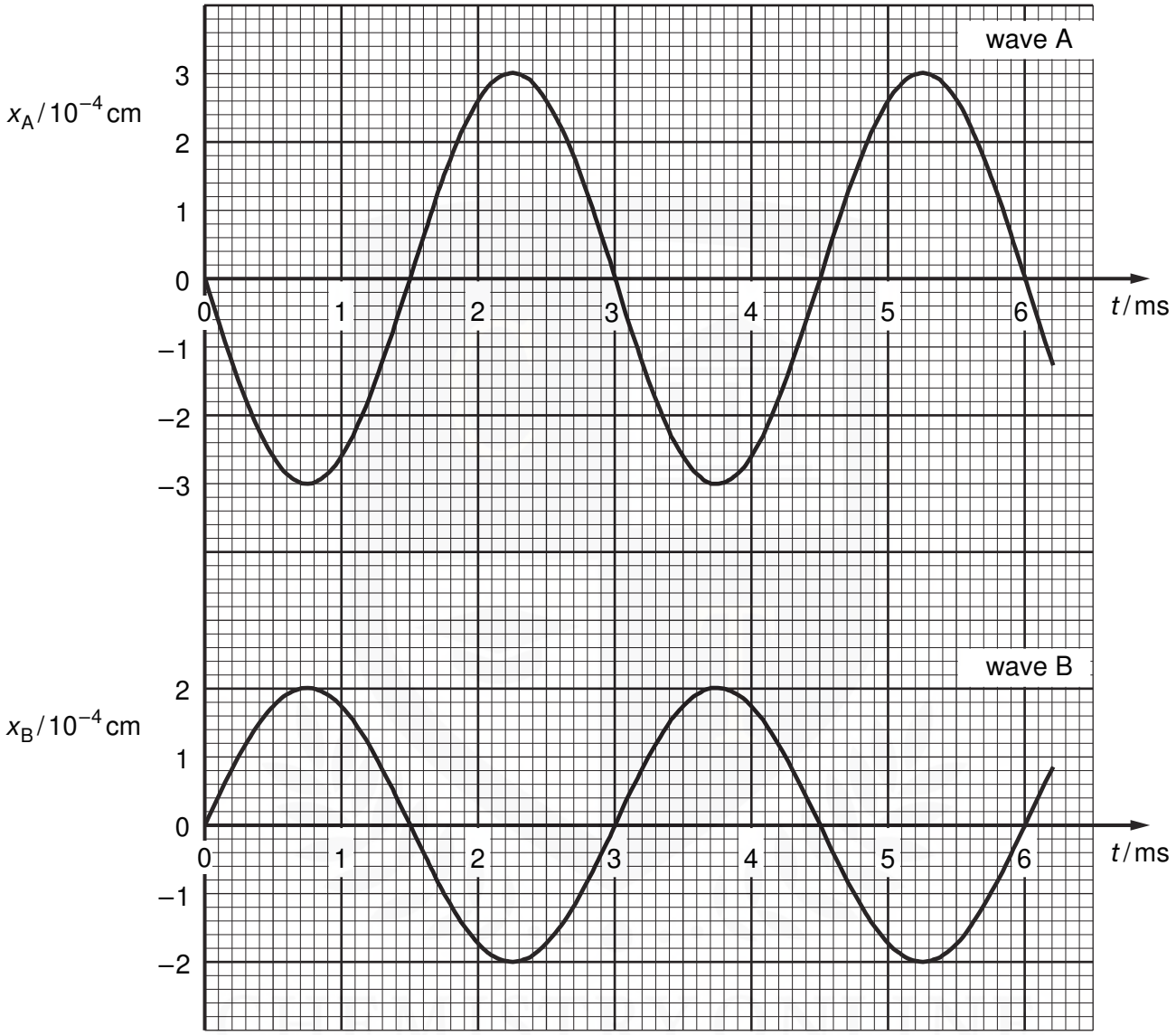

Fig. 5.1

(a) By reference to Fig. 5.1, state one similarity and one difference between these two waves.

similarity: .....

difference: ..... [2]

(b) State, with a reason, whether the two waves are coherent.

.....

..... [1]

(c) The intensity of wave A alone at point P is I.

(i) Show that the intensity of wave B alone at point P is $\frac{4}{9}I$.

[2]

(ii) Calculate the resultant intensity, in terms of I, of the two waves at point P.

resultant intensity = ... I [2]

(d) Determine the resultant displacement for the two waves at point P

(i) at time t = 3.0 ms,

resultant displacement = ... cm [1]

(ii) at time t = 4.0 ms.

resultant displacement = ... cm [2]

2 The spectrum of electromagnetic waves is divided into a number of regions such as radio waves, visible light and gamma radiation.

(a) State three distinct features of waves that are common to all regions of the electromagnetic spectrum.

1. .....

2. .....

3. ..... [3]

(b) A typical wavelength of visible light is 495 nm. Calculate the number of wavelengths of this light in a wave of length 1.00 m.

number = ... [2]

(c) State a typical wavelength for

(i) X-rays,

wavelength = ... m

(ii) infra-red radiation.

wavelength = ... m
[2]

3 Fig. 2.1 shows the variation with distance *x* along a wave of its displacement *d* at a particular time.

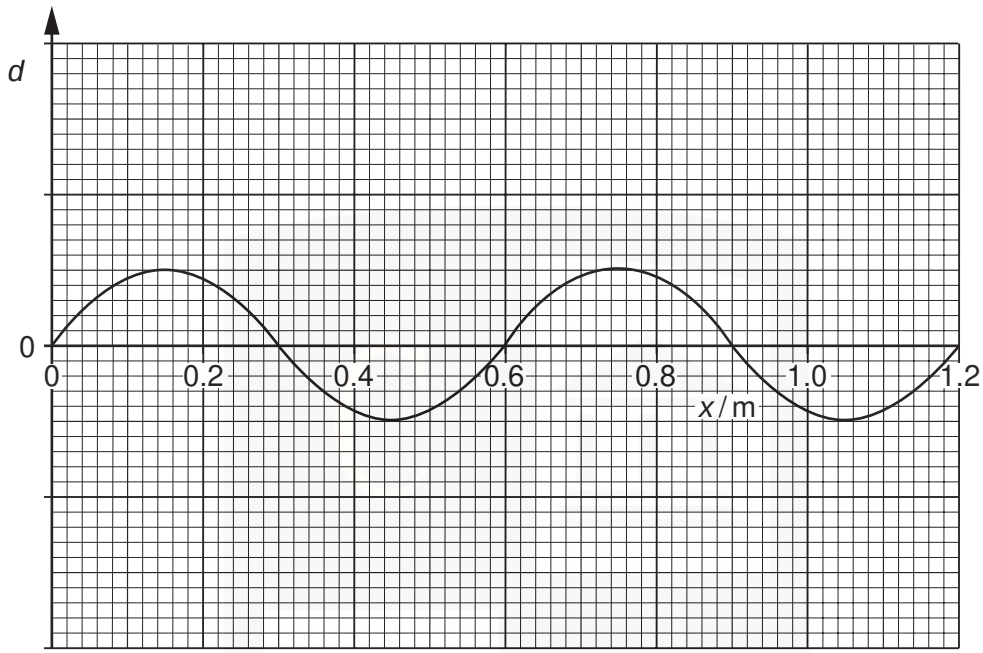

Fig. 2.1

The wave is a progressive wave having a speed of 330 m s^{-1}.

(a) **(i)** Use Fig. 2.1 to determine the wavelength of the wave.

wavelength = ... m

(ii) Hence calculate the frequency of the wave.

frequency = ... Hz
[3]

(b) A second wave has the same frequency and speed as the wave shown in Fig. 2.1 but has double the intensity. The phase difference between the two waves is 180°.

On the axes of Fig. 2.1, sketch a graph to show the variation with distance *x* of the displacement *d* of this second wave. [2]

4 **(a)** Fig. 4.1 shows the variation with time *t* of the displacement *x* of one point in a progressive wave.

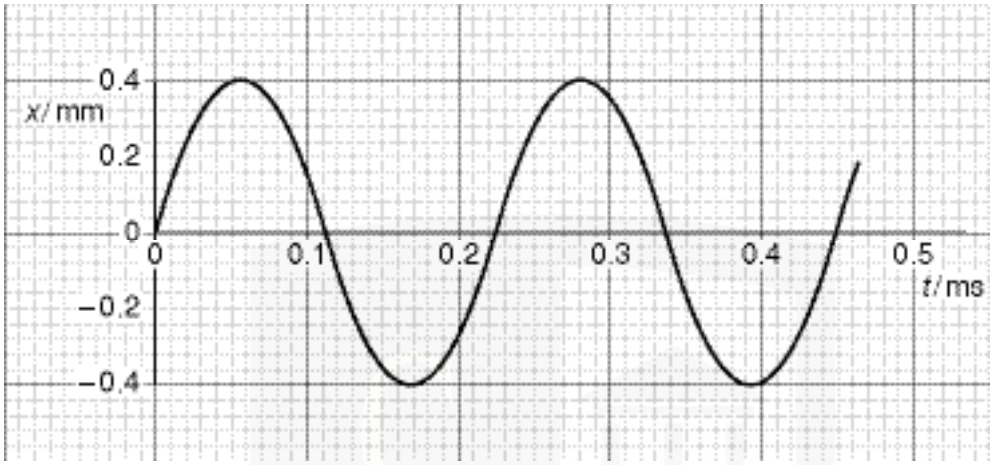

Fig. 4.1

Fig. 4.2 shows the variation with distance *d* along the same wave of the displacement *x*.

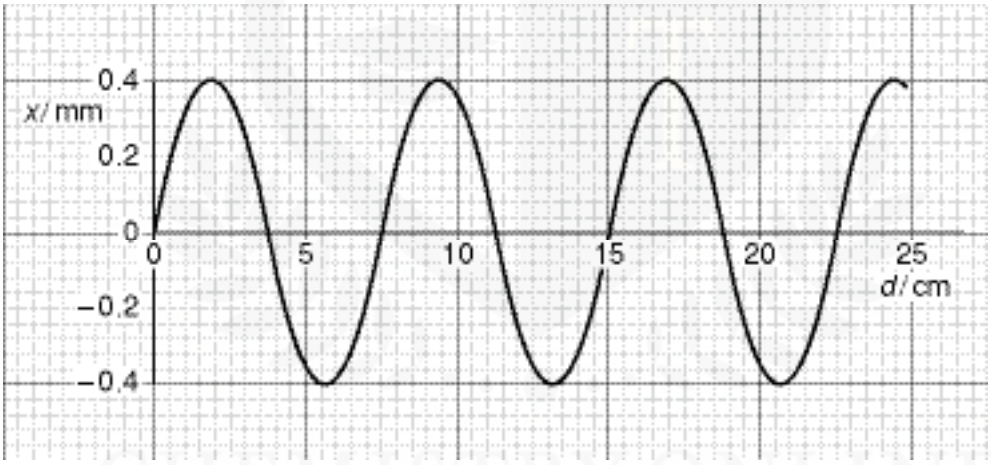

Fig. 4.2

(i) Use Figs. 4.1 and 4.2 to determine, for this wave,

1. the amplitude,

amplitude = …….. mm

2. the wavelength,

wavelength = …….…. m

3. the frequency,

frequency = ……..…….. Hz

4. the speed.

speed = …….. m s^{-1}

[6]

(ii) On Fig. 4.2, draw a second wave having the same amplitude but half the frequency as that shown. [1]

(b) Light of wavelength 590 nm is incident at right angles to a diffraction grating having 5.80×10^5 lines per metre, as illustrated in Fig. 4.3.

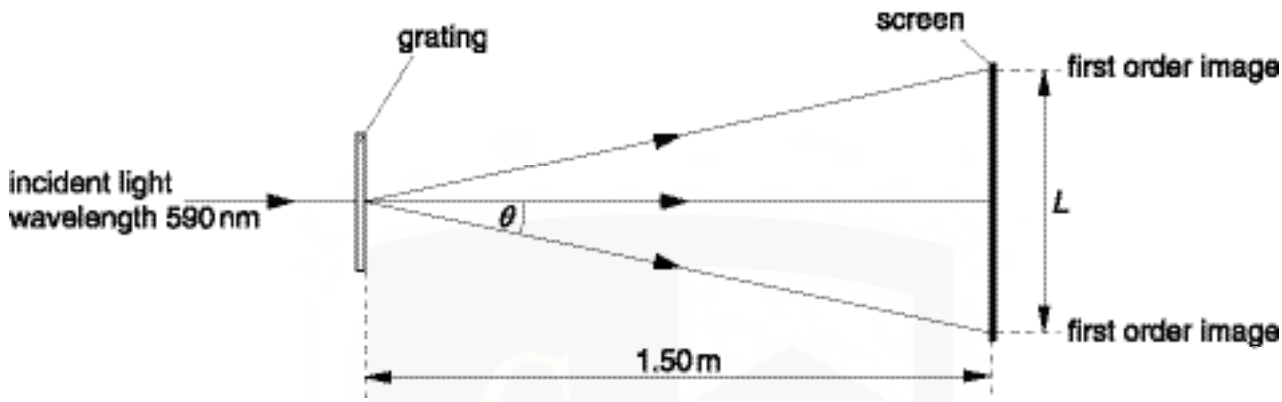

Fig. 4.3

A screen is placed parallel to and 1.50 m from the grating. Calculate

(i) the spacing, in µm, of the lines of the grating,

spacing = ... µm

(ii) the angle θ to the original direction of the light at which the first order diffracted image is seen,

angle = ... °

(iii) the minimum length *L* of the screen so that both first order diffracted images may be viewed at the same time on the screen.

length = …….. m

[5]

5 The variation with time t of the displacement x of a point in a transverse wave T_1 is shown in Fig. 5.1.

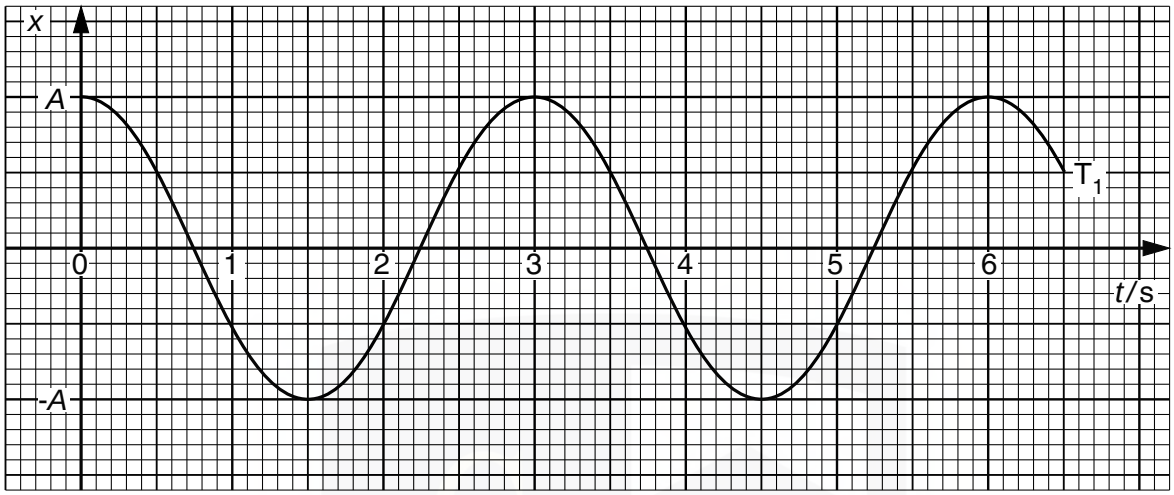

Fig. 5.1

(a) By reference to displacement and direction of travel of wave energy, explain what is meant by a *transverse wave*.

.....

.....[1]

(b) A second transverse wave T_2, of amplitude A has the same waveform as wave T_1 but lags behind T_1 by a phase angle of 60°. The two waves T_1 and T_2 pass through the same point.

(i) On Fig. 5.1, draw the variation with time t of the displacement x of the point in wave T_2. [2]

(ii) Explain what is meant by the *principle of superposition* of two waves.

.....

.....

.....[2]

(iii) For the time t = 1.0 s, use Fig. 5.1 to determine, in terms of A,

1. the displacement due to wave T_1 alone,

displacement = ...

2. the displacement due to wave T_2 alone,

displacement = ...

3. the resultant displacement due to both waves.

displacement = ...

[3]

6 **(a)** Two overlapping waves of the same type travel in the same direction. The variation with distance *x* of the displacement *y* of each wave is shown in Fig. 6.1.

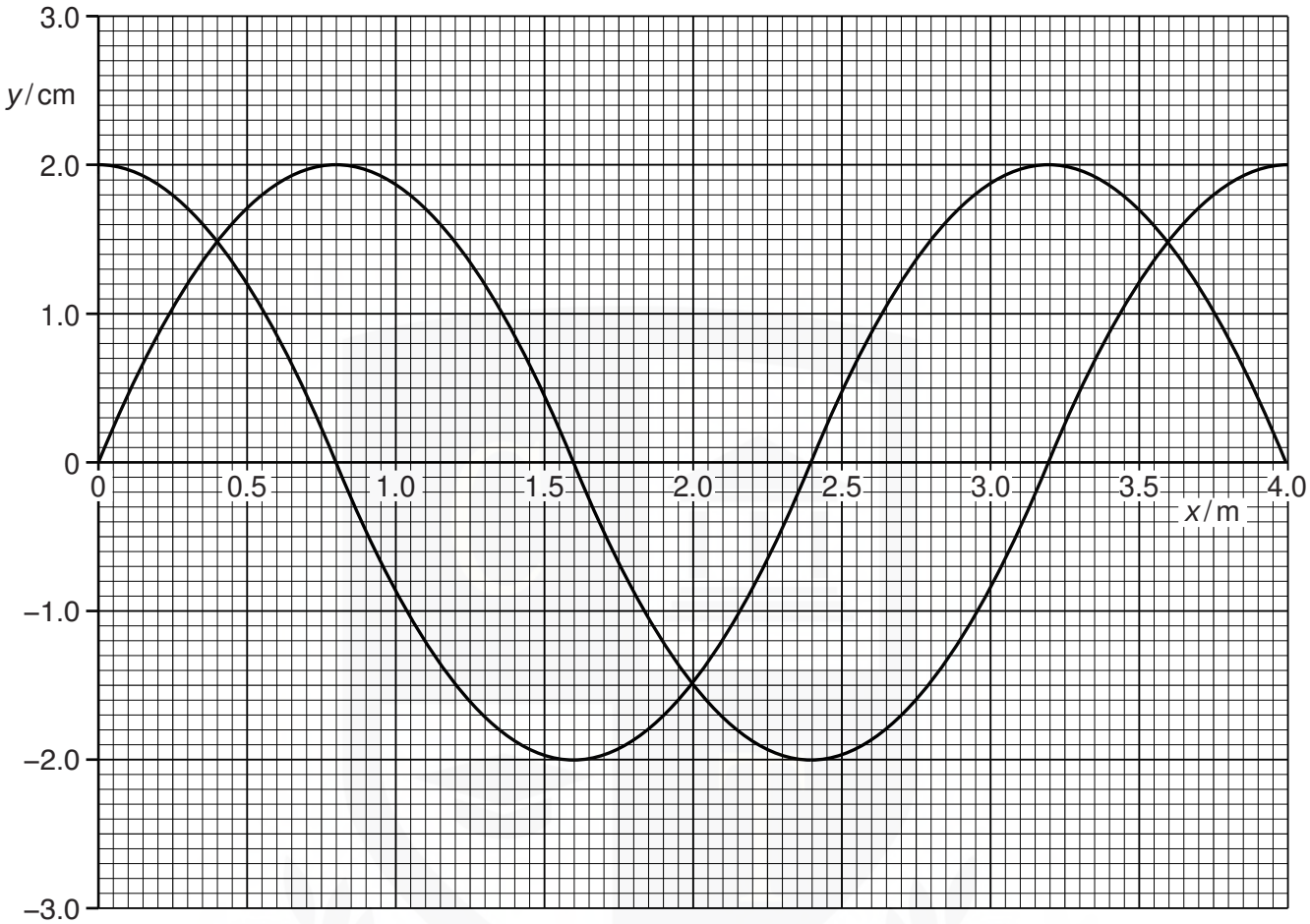

Fig. 6.1

The speed of the waves is 240 m s^{-1}. The waves are coherent and produce an interference pattern.

(i) Explain the meaning of *coherence* and *interference*.

coherence: .....

.....

interference: .....

.....

[2]

(ii) Use Fig. 6.1 to determine the frequency of the waves.

frequency = ... Hz [2]

(iii) State the phase difference between the waves.

phase difference = ... ° [1]

(iv) Use the principle of superposition to sketch, on Fig. 6.1, the resultant wave. [2]

(b) An interference pattern is produced with the arrangement shown in Fig. 6.2.

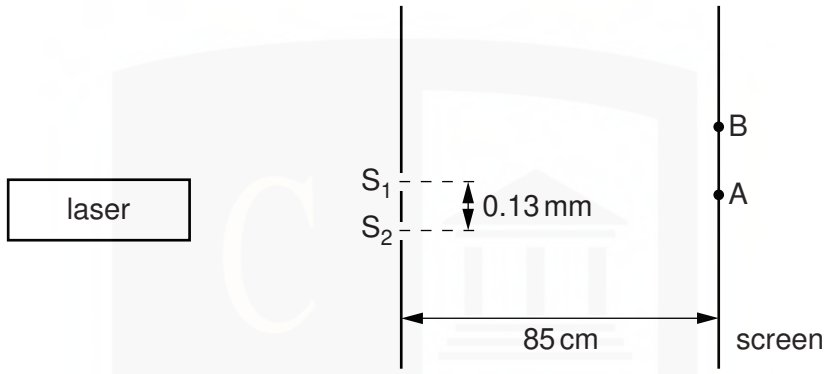

Fig. 6.2 (not to scale)

Laser light of wavelength λ of 546 nm is incident on the slits S_1 and S_2. The slits are a distance 0.13 mm apart. The distance between the slits and the screen is 85 cm.

Two points on the screen are labelled A and B. The path difference between S_1A and S_2A is zero. The path difference between S_1B and S_2B is 2.5λ. Maxima and minima of intensity of light are produced on the screen.

(i) Calculate the distance AB.

distance = ... m [3]

(ii) The laser is replaced by a laser emitting blue light. State and explain the change in the distance between the maxima observed on the screen.

.....

.....

7 **(a)** The Young modulus of the metal of a wire is 1.8×10^{11} Pa. The wire is extended and the strain produced is 8.2×10^{-4}.
Calculate the stress in GPa.

stress = ...GPa [2]

(b) An electromagnetic wave has frequency 12 THz.

(i) Calculate the wavelength in μm.

wavelength = ...μm [2]

(ii) State the name of the region of the electromagnetic spectrum for this frequency.

.....[1]

(c) An object B is on a horizontal surface. Two forces act on B in this horizontal plane. A vector diagram for these forces is shown to scale in Fig. 1.1.

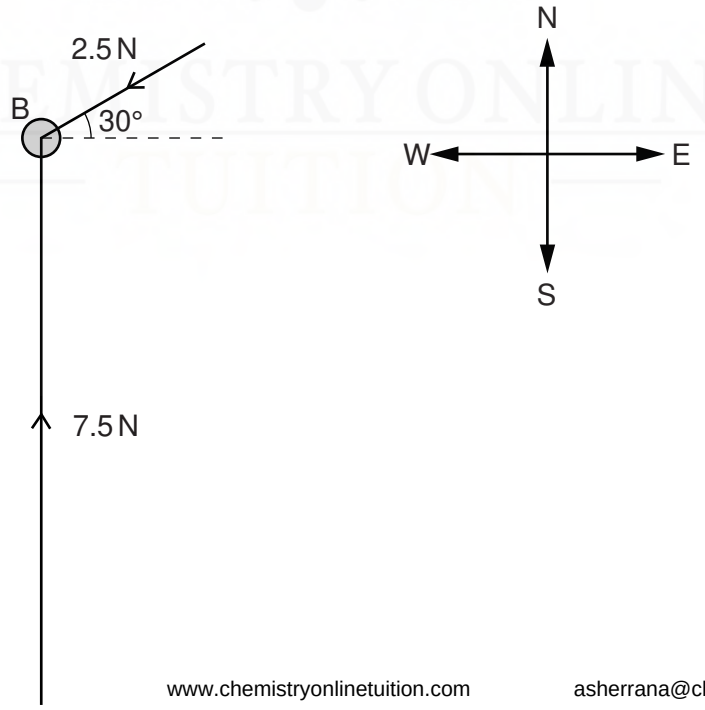

Fig. 1.1

A force of 7.5 N towards north and a force of 2.5 N from 30° north of east act on B.
The mass of B is 750 g.

(i) On Fig. 1.1, draw an arrow to show the approximate direction of the resultant of these two forces. [1]

(ii) **1.** Show that the magnitude of the resultant force on B is 6.6 N.

[1]

2. Calculate the magnitude of the acceleration of B produced by this resultant force.

magnitude = ... $m\,s^{-2}$ [2]

(iii) Determine the angle between the direction of the acceleration and the direction of the 7.5 N force.

angle = ... ° [1]