# Work, Energy & Power

## Question paper 6

| | |
|---|---|
| **Level** | International A Level |
| **Subject** | Physics |
| **Exam Board** | CIE |
| **Topic** | Work, Energy & Power |
| **Sub Topic** | |
| **Paper Type** | Theory |
| **Booklet** | Question paper 6 |

**Time Allowed:** **80 minutes**

**Score:** **/66**

**Percentage:** **/100**

| A* | A | B | C | D | E | U |
|---|---|---|---|---|---|---|
| >85% | '77.5% | 70% | 62.5% | 57.5% | 45% | <45% |

**1** **(a)** A ball is thrown vertically down towards the ground and rebounds as illustrated in Fig. 2.1.

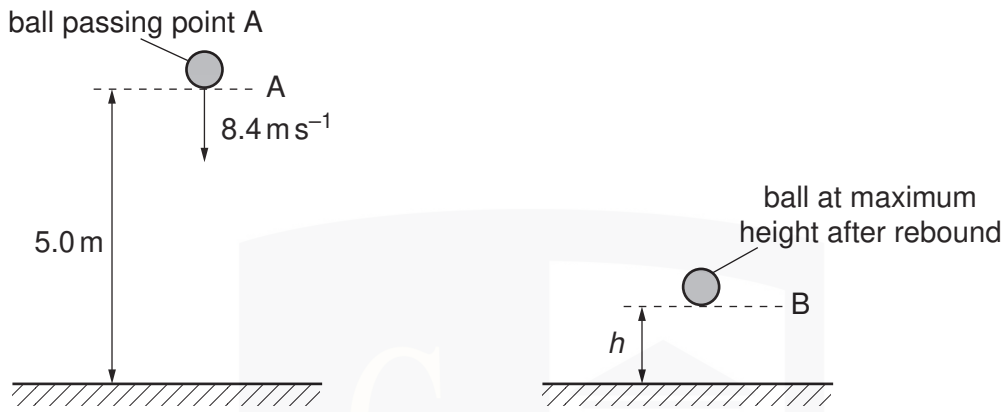


**Fig. 2.1**

As the ball passes A, it has a speed of $8.4\,m\,s^{-1}$. The height of A is 5.0 m above the ground. The ball hits the ground and rebounds to B. Assume that air resistance is negligible.

**(i)** Calculate the speed of the ball as it hits the ground.

speed = ..... $m\,s^{-1}$ [2]

**(ii)** Show that the time taken for the ball to reach the ground is 0.47 s.

[1]

**(b)** The ball rebounds vertically with a speed of $4.2\,m\,s^{-1}$ as it leaves the ground. The time the ball is in contact with the ground is 20 ms. The ball rebounds to a maximum height *h*.

The ball passes A at time $t = 0$. On Fig. 2.2, plot a graph to show the variation with time *t* of the velocity *v* of the ball. Continue the graph until the ball has rebounded from the ground and reaches B.

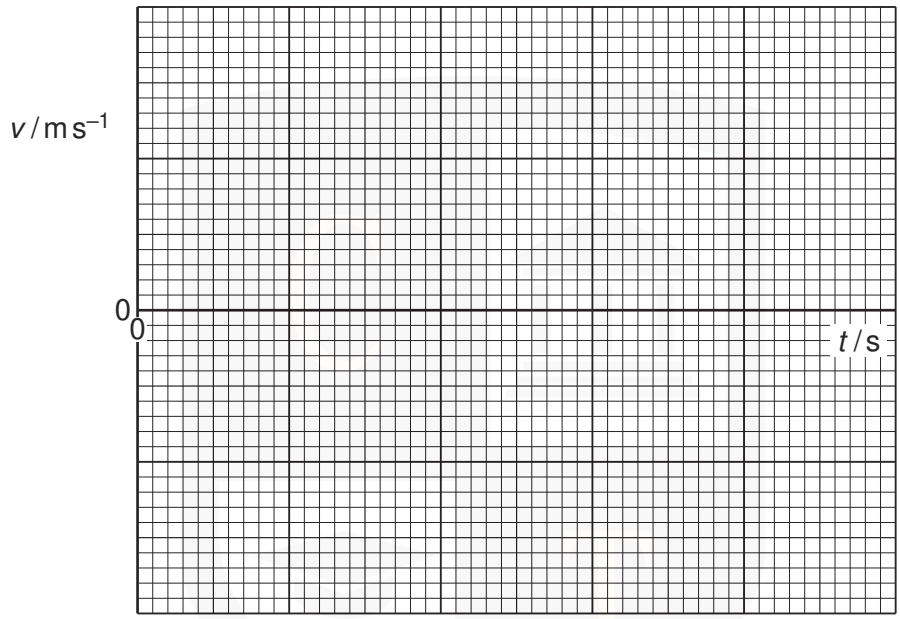


**Fig. 2.2** [3]

**(c)** The ball has a mass of 0.050 kg. It moves from A and reaches B after rebounding.

**(i)** For this motion, calculate the change in

**1.** kinetic energy,

change in kinetic energy = ..... J [2]

**2.** gravitational potential energy.



change in potential energy = ..... J [3]

**(ii)** State and explain the total change in energy of the ball for this motion.

.....

.....

.....

..... [2]

**2** **(a)** Define *electric field strength*.

.....

.....[1]

**(b)** A uniform electric field is produced by applying a potential difference of 1200 V across two parallel metal plates in a vacuum, as shown in Fig. 4.1.

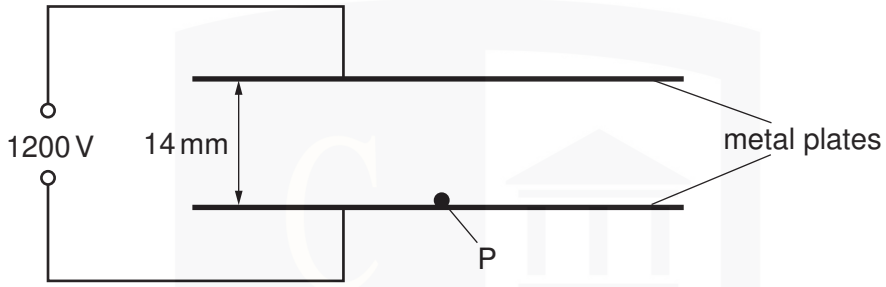


**Fig. 4.1**

The separation of the plates is 14 mm. A particle P with charge $3.2 \times 10^{-19}$ C and mass $6.6 \times 10^{-27}$ kg starts from rest at the lower plate and is moved vertically to the top plate by the electric field.

Calculate

**(i)** the electric field strength between the plates,

electric field strength = ..... $V\,m^{-1}$ [2]

**(ii)** the work done on P by the electric field,

work done = ..... J [2]

**(iii)** the gain in gravitational potential energy of P,

gain in potential energy = ..... J [2]

**(iv)** the gain in kinetic energy of P,

gain in kinetic energy = ..... J [1]

**(v)** the speed of P when it reaches the top plate.

speed = ..... $m\,s^{-1}$ [2]

**3** A ball is thrown against a vertical wall. The path of the ball is shown in Fig. 3.1.

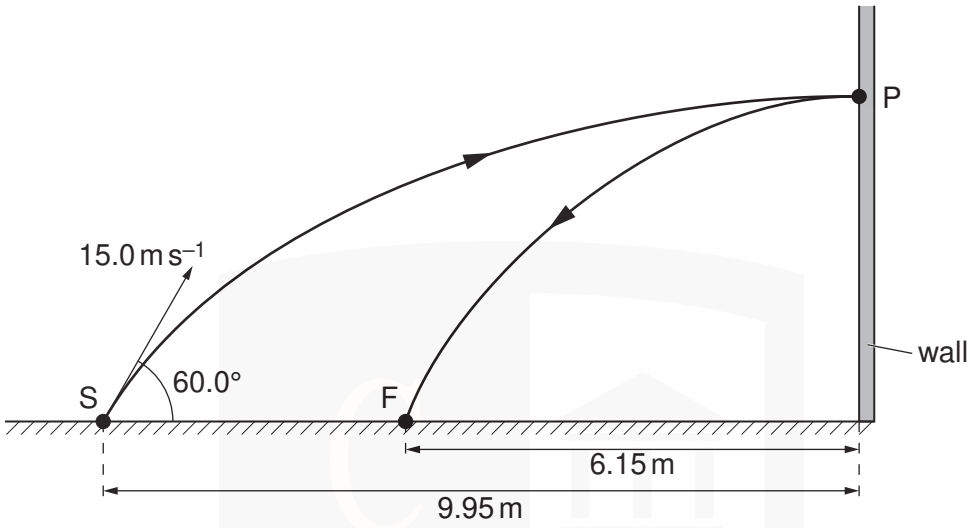


**Fig. 3.1** (not to scale)

The ball is thrown from S with an initial velocity of $15.0\,m\,s^{-1}$ at 60.0° to the horizontal. Assume that air resistance is negligible.

**(a)** For the ball at S, calculate

**(i)** its horizontal component of velocity,

horizontal component of velocity = ..... $m\,s^{-1}$ [1]

**(ii)** its vertical component of velocity.

vertical component of velocity = ..... $m\,s^{-1}$ [1]

**(b)** The horizontal distance from S to the wall is 9.95 m. The ball hits the wall at P with a velocity that is at right angles to the wall. The ball rebounds to a point F that is 6.15 m from the wall.

Using your answers in **(a)**,

**(i)** calculate the vertical height gained by the ball when it travels from S to P,



height = ..... m [1]

**(ii)** show that the time taken for the ball to travel from S to P is 1.33 s,

[1]

**(iii)** show that the velocity of the ball immediately after rebounding from the wall is about $4.6\,m\,s^{-1}$.

[1]

**(c)** The mass of the ball is $60 \times 10^{-3}$ kg.

**(i)** Calculate the change in momentum of the ball as it rebounds from the wall.

change in momentum = ..... N s [2]

**(ii)** State and explain whether the collision is elastic or inelastic.

.....

.....

..... [1]

**4** **(a)** Define the terms

**(i)** *power*,

.....[1]

**(ii)** the *Young modulus*.

.....

.....

.....[1]

**(b)** A crane is used to lift heavy objects, as shown in Fig. 3.1.

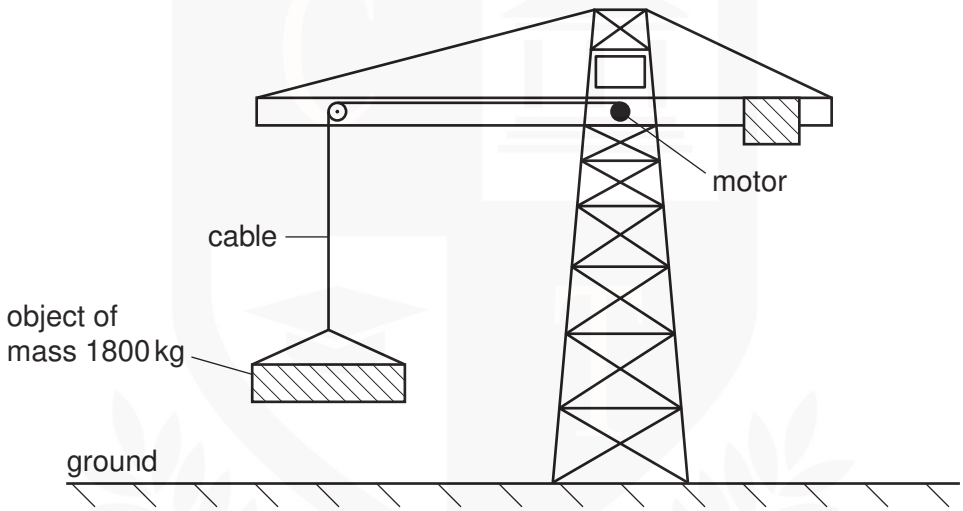


**Fig. 3.1**

The motor in the crane lifts a total mass of 1800 kg from rest on the ground. The cable supporting the mass is made of steel of Young modulus $2.4 \times 10^{11}$ Pa. The cross-sectional area of the cable is $1.3 \times 10^{-4}\,m^2$. As the mass leaves the ground, the strain in the cable is 0.0010. Assume the weight of the cable to be negligible.

**(i)** **1.** Use the Young Modulus of the steel to show that the tension in the cable is $3.1 \times 10^4$ N.

[2]

**2.** Calculate the acceleration of the mass as it is lifted from the ground.

acceleration = ..... $m\,s^{-2}$ [3]

**(ii)** The motor now lifts the mass through a height of 15 m at a constant speed.

Calculate

**1.** the tension in the lifting cable,

tension = ..... N [1]

**2.** the gain in potential energy of the mass.

gain in potential energy = ..... J [2]

**(iii)** The motor of the crane is 30% efficient. Calculate the input power to the motor required to lift the mass at a constant speed of $0.55\,m\,s^{-1}$.

input power = ..... W [3]

**5** **(a)** The variation with extension $x$ of the tension $F$ in a spring is shown in Fig. 3.1.

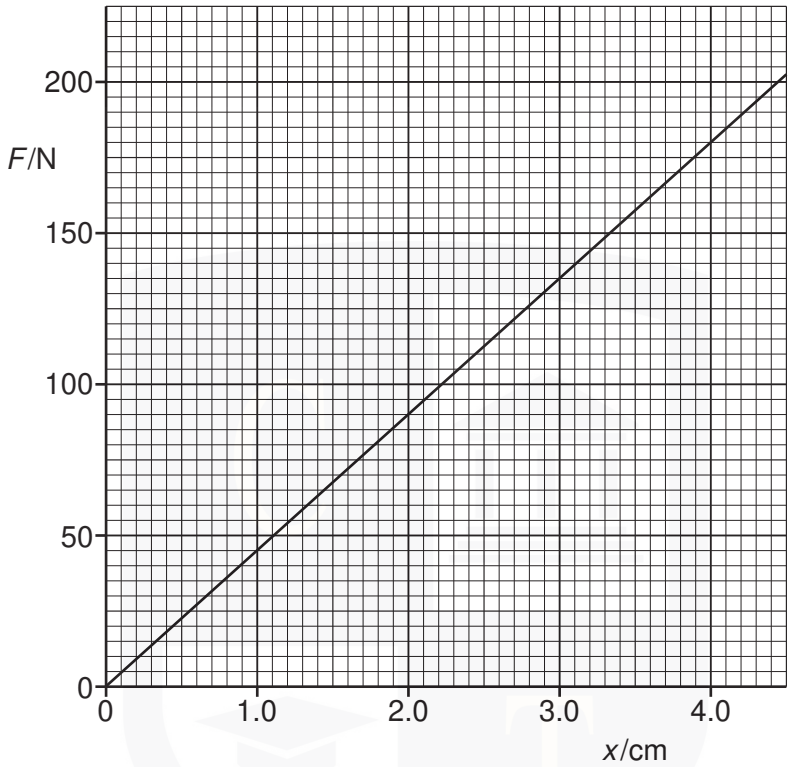


**Fig. 3.1**

Use Fig. 3.1 to calculate the energy stored in the spring for an extension of 4.0 cm.
Explain your working.

energy = ..... J [3]

**(b)** The spring in **(a)** is used to join together two frictionless trolleys A and B of mass $M_1$ and $M_2$ respectively, as shown in Fig. 3.2.

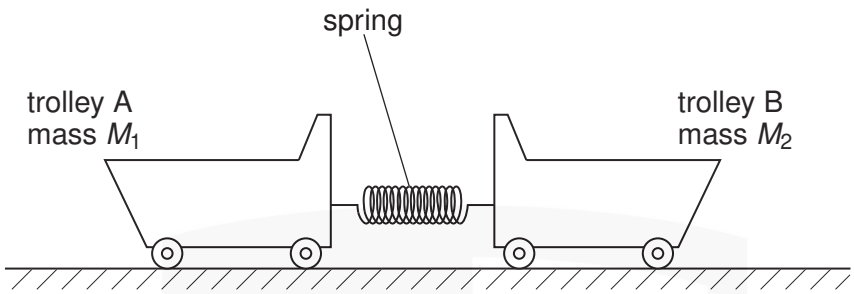


**Fig. 3.2**

The trolleys rest on a horizontal surface and are held apart so that the spring is extended.

The trolleys are then released.

**(i)** Explain why, as the extension of the spring is reduced, the momentum of trolley A is equal in magnitude but opposite in direction to the momentum of trolley B.

.....

.....

.....

.....[2]

**(ii)** At the instant when the extension of the spring is zero, trolley A has speed $V_1$ and trolley B has speed $V_2$.
Write down

**1.** an equation, based on momentum, to relate $V_1$ and $V_2$,

.....

.....[1]

**2.** an equation to relate the initial energy $E$ stored in the spring to the final energies of the trolleys.

.....

.....[1]

**(iii)** **1.** Show that the kinetic energy $E_K$ of an object of mass $m$ is related to its momentum $p$ by the expression

$$E_K = \frac{p^2}{2m}.$$

[1]

**2.** Trolley A has a larger mass than trolley B.
Use your answer in **(ii) part 1** to deduce which trolley, A or B, has the larger kinetic energy at the instant when the extension of the spring is zero.

.....

.....[1]

**6** A cyclist is moving up a slope that has a constant gradient. The cyclist takes 8.0 s to climb the slope.
The variation with time *t* of the speed *v* of the cyclist is shown in Fig. 3.1.

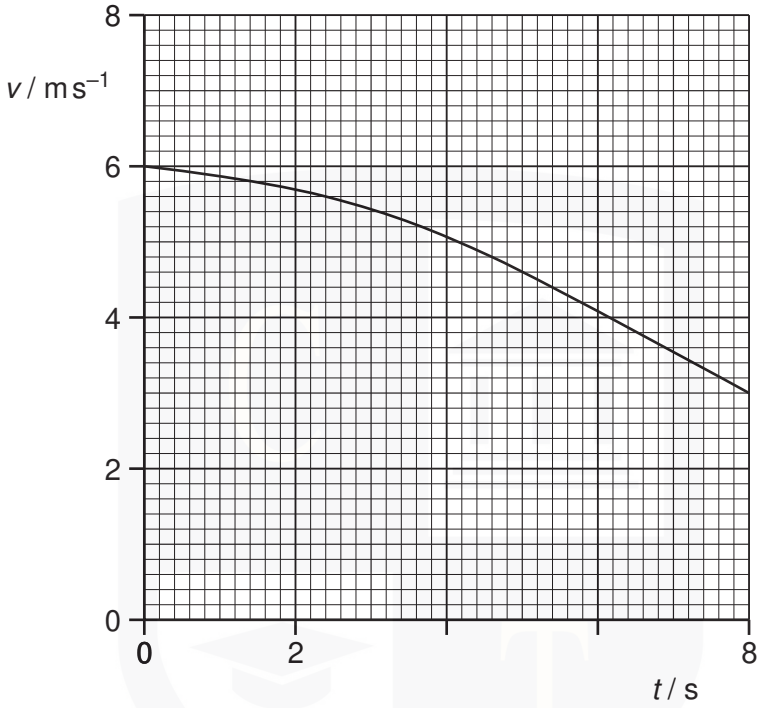


**Fig. 3.1**

**(a)** Use Fig. 3.1 to determine the total distance moved up the slope.

distance = ..... m [3]

**(b)** The bicycle and cyclist have a combined mass of 92 kg.
The vertical height through which the cyclist moves is 1.3 m.

**(i)** For the movement of the bicycle and cyclist between $t = 0$ and $t = 8.0$ s,

**1.** use Fig. 3.1 to calculate the change in kinetic energy,

change = ..... J [2]

**2.** calculate the change in gravitational potential energy.

change = ..... J [2]

**(ii)** The cyclist pedals continuously so that the useful power delivered to the bicycle is 75 W.
Calculate the useful work done by the cyclist climbing up the slope.

work done = ..... J [2]

**(c)** Some energy is used in overcoming frictional forces.

**(i)** Use your answers in **(b)** to show that the total energy converted in overcoming frictional forces is approximately 670 J.

[1]

**(ii)** Determine the average magnitude of the frictional forces.

average force = .....N [1]

**(d)** Suggest why the magnitude of the total resistive force would not be constant.

.....

.....

.....[2]